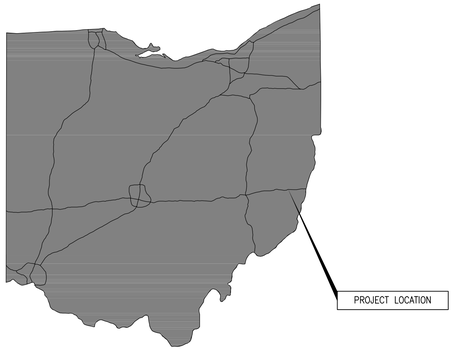

STATE MAP

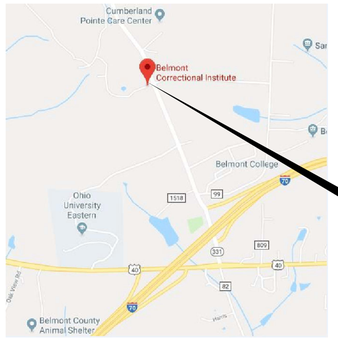

VICINITY MAP

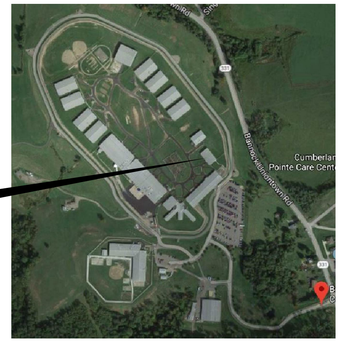

CAMPUS LOCATION MAP

BELMONT CORRECTIONAL INSTITUTION
RECOVERY SERVICES MOVEABLE PARTITION
BUILDING 5B

68518 BANNOCK ROAD, S.R. 331
ST. CLAIRSVILLE, BELMONT COUNTY

PREPARED FOR

STATE OF OHIO: OHIO FACILITIES CONSTRUCTION COMMISSION
30 WEST SPRING STREET, 4TH FLOOR, COLUMBUS, OHIO 43215
PROJECT NUMBER DRC-19L002

PREPARED BY
STAR CONSULTANTS INC.
1910 CROWN PARK COURT COLUMBUS, OHIO 43220
TEL: 614.538.8445 FAX: 614.538.8446
WWW.STARCONSULTING.ORG

PROJECT DESCRIPTION

THIS PROJECT ENCOMPASES PROVIDING A MOVEABLE PARTITION IN THE LARGE MULTI PURPOSE ROOM #114 IN THE RECOVERY SERVICES BUILDING 5B.

GENERAL NOTES

1. ALL WORK SHALL FOLLOW STATE AND LOCAL BUILDING AND ZONING CODES AND/OR OTHER APPLICABLE CODES.
2. THE REGULATIONS AND CONSTRUCTION STANDARDS OF THE COUNTY OF BELMONT, STATE OF OHIO, INCLUDING ALL SUPPLEMENTS THERETO, SHALL GOVERN ALL CONSTRUCTION.
3. ALL EXISTING CONDITIONS, DIMENSIONS, ETC. SHALL BE VERIFIED PRIOR TO START OF WORK. NOTIFY ARCHITECT/ENGINEER OF DISCREPANCIES BEFORE PROCEEDING WITH THE WORK.
4. PRIOR TO START OF THE WORK LOCATE ALL EXISTING UNDERGROUND, OVERHEAD OR HIDDEN UTILITIES. RELOCATE OR RE-ROUTE AS REQUIRED.
5. ALL PRODUCTS USED IN THE PROJECT SHALL BE INSTALLED PER MANUFACTURER'S RECOMMENDATIONS.
6. ALL CONTRACTORS SHALL LEAVE THE SITE CLEAN AND FREE OF DEBRIS AND UNUSED MATERIALS.

SITE PLAN INFORMATION

ZONING REVIEW:

ADDRESS: 68518 BANNOCK UNIONTOWN ROAD,
ST. CLAIRSVILLE, OHIO 43950

CODE REVIEW INFORMATION:

BUILDING CODE	OHIO BUILDING CODE (OBC) – 2007
MECHANICAL CODE	OHIO MECHANICAL CODE (OMC) – 2007
PLUMBING CODE	OHIO PLUMBING CODE (OPC) – 2007
ELECTRICAL CODE	NATIONAL ELECTRICAL CODE (NEC) – 2007

BUILDING CODE SUMMARY:

EXISTING USE GROUP	A-3	OBC SECTION 302.1
PROPOSED USE GROUP	A-3 (NO CHANGE)	OBC SECTION 302.1
SPRINKLERED:	(YES)	

BUILDING PARKING SPACES: (NO CHANGE)

EXIT ACCESS TRAVEL DISTANCE PERMITTED WITH SPRINKLERS: (250 FT) MAX OBC TABLE 1017.2

ACTUAL OCCUPANT LOAD (1-AREA @170 OR 2 AREAS @ 85) OBC TABLE 1004.1.2

FIRE SUPRESSION	(YES)
ALARM SYSTEM:	(YES?)
EXTERIOR LIGHTING:	(YES?)

ISSUED FOR PERMIT					DRAWING INDEX	
					GENERAL	
●					G-000	TITLE SHEET
●					G-110	LIFE SAFETY PLAN
					ARCHITECTURAL	
●					A-110	FIRST FLOOR PLAN
●					A-111	FIRST FLOOR REFLECTED CEILING PLAN
●					A-300	BUILDING SECTIONS
●					A-510	DETAILS
●					A-710	MOVEABLE PARTITION DETAILS
●					A-711	MOVEABLE PARTITION DETAILS
●					A-712	MOVEABLE PARTITION DETAILS
					STRUCTURAL	
●					S-300	STRUCTURAL SECTIONS

STATE OF OHIO
ALI ALGHOTHANI
E-57345
REGISTERED PROFESSIONAL ENGINEER

01/01/2019

ISSUED FOR PERMIT
DECEMBER 7, 2018

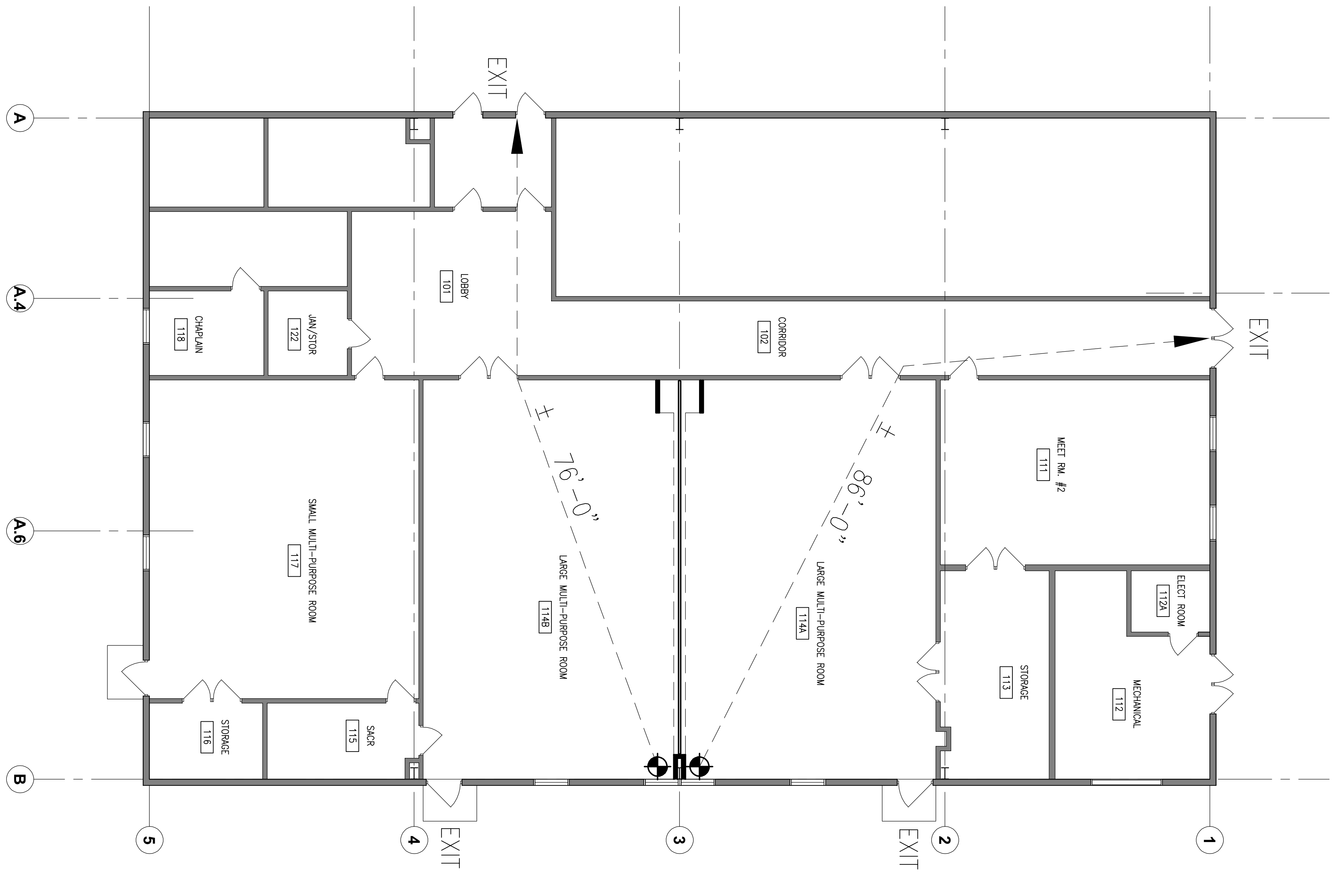

LEGEND

X'-XX" TRAVEL DISTANCE

DRC-19L002

BELMONT CORRECTIONAL INSTITUTION
RECOVERY SERVICES MOVEABLE PARTITION, BLDG 5B
68518 BANNOCK ROAD, S.R. 331
ST. CLAIRSVILLE, BELMONT COUNTY

FIRST FLOOR LIFE SAFETY PLAN

SHEET G-110

PJT #:
DATE:
DRN. BY: INITIAL
DGN. BY: INITIAL
REV. BY: INITIAL

STAR CONSULTANTS, INC
ARCHITECTS & ENGINEERS
design | strategy | vision

STATE OF OHIO · ALI ALGHOTANI · 65734 · REGISTERED PROFESSIONAL ENGINEER

7910 Crown Park Ct. Columbus, OH 43235
Tel: 614.538.8445 Fax: 614.538.8446
www.starconsultants.org

REVISIONS

REV#	DATE	REMARKS

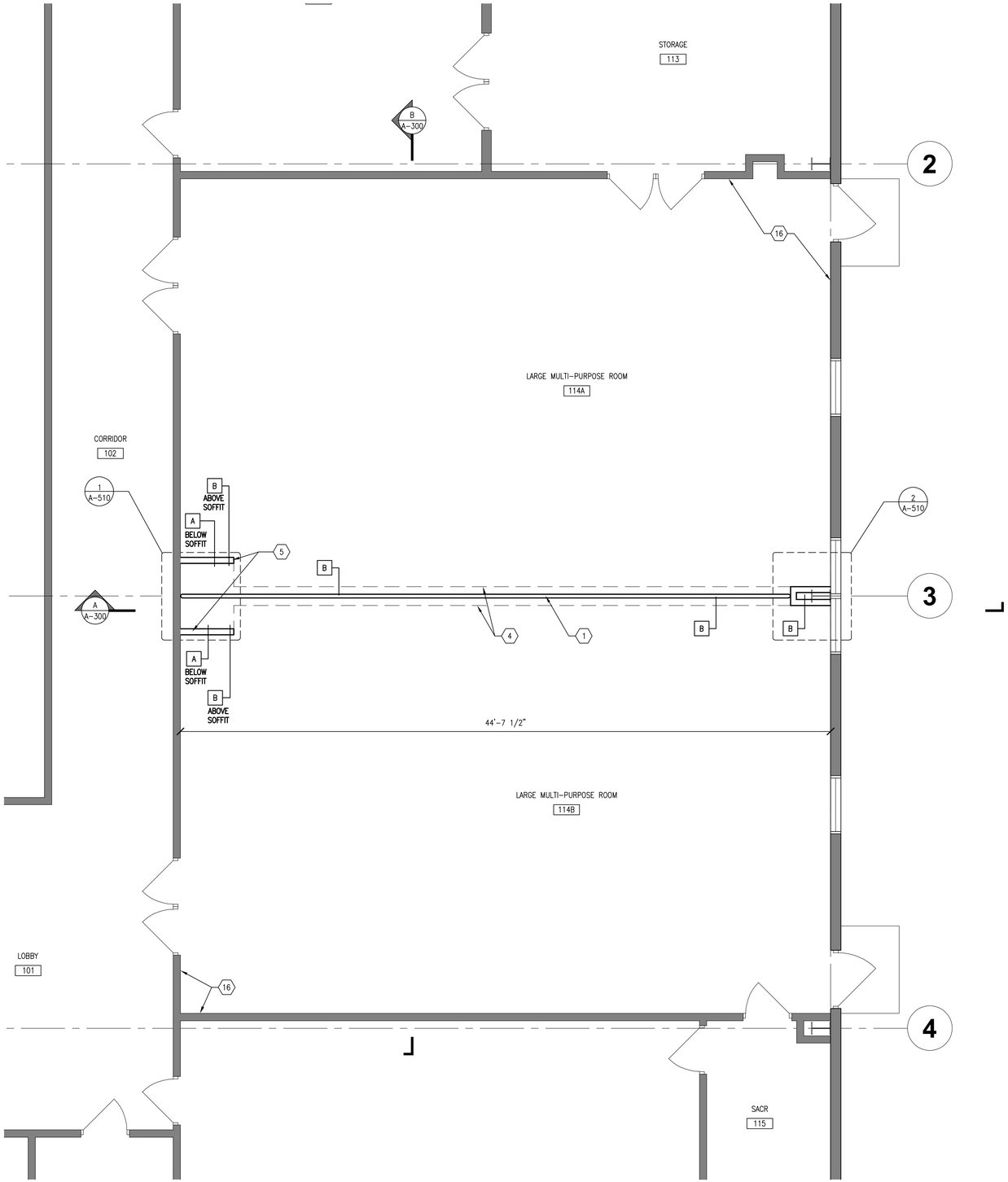

A FIRST FLOOR PLAN
1/4" = 1'-0"

PARTITION TYPES

"A" 1- LAYER 5/8" TYPE X GYPSUM BOARD BOTH SIDES O/ 3-5/8" 20 GAUGE STUDS 24 O.C. W/ 3 1/2" SOUND BATT INSULATION. PROVIDE 4" VINYL BASE, COLOR TO MATCH EXISTING.

"B" 2- LAYERS 5/8" TYPE X GYPSUM BOARD ONE-SIDE O/ 3-5/8" 20 GAUGE STUDS 24 O.C. W/ 3 1/2" SOUND BATT INSULATION TO UNDERSIDE OF DECK. PROVIDE 4" VINYL BASE, COLOR TO MATCH EXISTING.

GENERAL NOTES:

1. ALL CONSTRUCTION SHALL COMPLY TO THE CURRENT EDITION OF THE OHIO BUILDING CODE, ASHRAE, ADA, AND ANY OR ALL LOCAL ORDINANCES, OR ZONING CODES CURRENTLY IN FORCE.
2. ALL ELECTRICAL WORK SHALL COMPLY WITH THE REQUIREMENTS OF ALL LOCAL ORDINANCES. THE OHIO BASIC BUILDING CODE, AND THE NATIONAL ELECTRIC CODE.
3. THE GENERAL CONTRACTOR IS TO VERIFY ALL DIMENSIONS AND EXISTING CONDITIONS WITH THE DRAWINGS. GENERAL CONTRACTOR IS TO REPORT IMMEDIATELEY TO THE ARCHITECT ANY VARIANCES IN THE PLANS, DETAILS, DIMENSIONS, SPECIFITACIONS, OR FIELD CONDITIONS THAT MAY CAUSE CONSTRUCTION PROBLEMS PRIOR TO COMMENCEMENT OF WORK. GENERAL CONTRACTOR SHALL BE RESPONSIBLE FOR VERIFYING COMPLIANCE OF SHOP DRAWINGS WITH PLANS, PRIOR TO ORDERING MATERIALS, OR BEGINING WORK. CONTRACTOR SHALL NOTIFY ARCHITECT, PRIOR TO COMMENCEMENT OF WORK, OF ANY DISCREPANCIES AND / OR INCONSISTENCIES, FOR CLARIFICATION OF DESIGN INTENT.
4. IT IS SOLELY THE RESPONSIBILITY OF THE CONTRACTOR, TO FOLLOW ALL THE APPLICABLE SAFETY CODES AND REGULATIONS DURING ALL PHASES OF CONSTRUCTION.
5. CHANGES SHALL NOT BE MADE ON SITE DEVIATING FROM THE CONSTRUCTION DOCUMENTS WITHOUT THE ARCHITECTS PRIOR APPROVAL. FOLLOW THE BEST TRADE AND ENGINEERING PRACTICES FOR THE ITEMS REQUIRED, BUT NOT SPECIFICALY DETAILED AND INDICATED.
6. ALL DIMENSIONS SHALL BE VERIFIED AT THE JOB BY THE GENERAL CONTRACTOR AND EACH SUB-CONTRACTOR. THE ARCHITECT MUST BE NOTIFIED OF ANY DESCREPENCIES BEFORE PROCEEDING WITH THE WORK.
7. IF ANY CONFLICT OR DISCREPANCY EXISTS BETWEEN THESE NOTES, THE GENERAL NOTES, ARCHITECTURAL DRAWINGS OR SPECIFICATIONS, THEN THE STRICTIST PROVISION SHALL GOVERN. IF ANY SUCH CONFLICTS EXIST, THE CONTRACTOR SHALL NOTIFY ARCHITECT FOR CLARIFICATION, PRIOR TO PROCEEDING WITH THE WORK.
8. DO NOT SCALE DRAWINGS; WRITTEN DIMENSIONS GOVERN. IN CASE OF CONFLICT NOTIFY ARCHITECT.
9. THE GENERAL CONTRACTOR SHALL BE RESPONSIBLE TO COORDINATE ALL WORK FOR THE MEANS, METHODS, PROCEDURES, TECHNIQUES, AND SEQUENCES OF CONSTRUCTION. ALL CORRESPONDENCE FROM SUB-CONTRACTORS SHALL BE ROUTED THROUGH THE GENERAL CONTRACTOR.
10. THE CONTRACTOR SHALL MAINTAIN FOR THE ENTIRE DURATION OF THE WORK ALL EXITS, EXIT LIGHTING, FIRE PROTECTION DEVICES, AND ALARMS IN CONFORMANCE WITH ALL APLICABLE CODES AND ORDINANCES.
11. GENERAL CONTRACTOR SHALL BE RESPONSIBLE FOR ALL SCHEDULING AND ALL ON SITE TESTING AND INSPECTIONS.
12. ALL CONTRACTORS SHALL LEAVE THE SITE CLEAN AND FREE OF DEBRIS AND UNUSED MATERIALS.

CODED NOTES

1. NEW MOVEABLE PARTITION
2. EXISTING HVAC DUCTWORK
3. NEW DUCTWORK AND REGISTER, MATCH EXISTING. CONTRACTOR TO MEASURE AIR QUANTITY FROM EXISTING (6) REGISTERS AND REDISTRIBUTE EQUALLY THROUGH (8) REGISTERS USING BALANCING DAMPERS AT EACH REGISTER.
4. LINE OF NEW SOFFIT ABOVE MOVEABLE PARTITION.
5. NEW PARTITION, SEE PARTITION TYPES SHEET A-110.
6. EXISTING CEILING FAN (VERIFY LOCATION)
7. EXISTING LIGHT FIXTURE
8. RELOCATED EXISTING LIGHT FIXTURE. EXTEND EXISTING WIRE AND CONDUIT TO NEW LOCATION AND RECONNECT.
9. NEW LIGHT FIXTURE (MATCH EXISTING). CIRCUIT NEW LIGHT FIXTURE WITH WIRE AND CONDUIT TO THE EXISTING LIGHT CIRCUIT. IF CIRCUIT AMPS GREATER THAN 80% OF BREAKER SIZE THEN CREATE A NEW CIRCUIT FOR LIGHT FIXTURES IN THE ROOM TO NEW 20A/1P BREAKER IN NEAREST PANEL.
10. RELOCATED EXISTING CEILING FAN. EXTEND WIRE CONDUIT TO NEW LOCATION AND RECONNECT.
11. EXISTING EXPOSED CEILING
12. NEW GYP. BD. SOFFIT
13. EXISTING DUCTWORK TO BE DEMOLISHED/RELOCATED, PROVIDE FLEXIBLE SEALED CONNECTION AT NEW JOINT
14. EXISTING CMU PARTITION, PROVIDE BEARING PLATE FOR NEW BEAM
15. NEW BEAM, BOT. OF STEEL AT 10'-3 3/8" A.F.F.
16. EXISTING PARTITION
17. PROVIDE FLANGE TO FLANGE WALL SLEEVE AT DUCTWORK PENETRATION OF NEW PARTITION, INSTALL FLANGE WITH ACOUSTICAL SEALANT.
18. REWIRE LIGHT SWITCHES IN LARGE MUTLI-PURPOSE ROOM 114A TO CONTROL 4 LIGHT FIXTURES IN 114A. REWIRE LIGHT SWITCHES IN LARGE MUTLI-PURPOSE ROOM 114B LIGHT SWITCHES TO CONTROL THOSE 4 LIGHT FIXTURES IN 114B.
19. EXISTING CEILING FAN TO BE DISCONNECTED AND REMOVED. MAINTAIN EXISTING FAN CIRCUIT AND DEMOLISH ANY WIRE AND CONDUIT BACK TO NEXT CEILING FAN.
20. PROVIDE DEEP DEFLECTION TRACK TO ALLOW ROOF DEFLECTION, HOLD GYP. BD. DOWN 5/8", SEAL JOINT W/ BACKER ROD AND FLEXIBLE CAULK.
21. REMOVE AND RELOCATE EXISTING REGISTER, PATCH AND REPAIR TO MATCH EXISTING PARTITION.

REVISIONS

REV#	DATE	REMARKS

STATE OF OHIO
ALI ALGHOTHANI
E-57345
REGISTERED PROFESSIONAL ENGINEER

STAR CONSULTANTS, INC
ARCHITECTS & ENGINEERS
design | strategy | vision
1910 Crown Park Ct. Columbus, OH 43235
Tel: 614.538.8445 Fax: 614.538.8446
www.starconsultants.org

DRC-19L002
BELMONT CORRECTIONAL INSTITUTION
RECOVERY SERVICES MOVEABLE PARTITION, BLDG 5B
68518 BANNOCK ROAD, S.R. 331
ST. CLAIRSVILLE, BELMONT COUNTY

FIRST FLOOR PLAN

PJT #:	
DATE:	
DRN. BY:	INITIAL
DGN. BY:	INITIAL
REV. BY:	INITIAL

SHEET
A-110

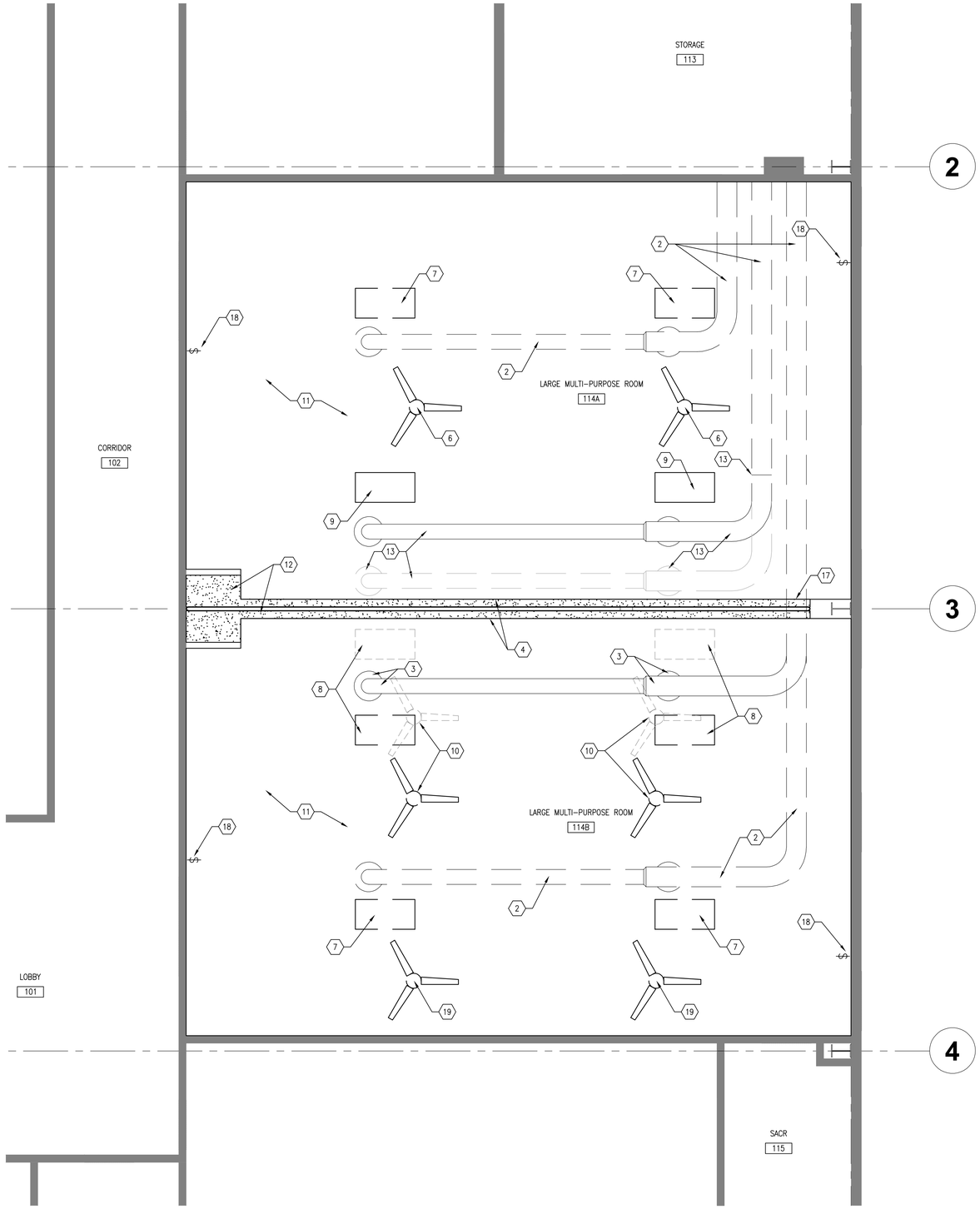

A FIRST FLOOR REFLECTED CEILING PLAN PLAN
1/4" = 1'-0"

PARTITION TYPES

"A" 1- LAYER 5/8" TYPE X GYPSUM BOARD BOTH SIDES O/ 3-5/8" 20 GAUGE STUDS 24 O.C. W/ 3 1/2" SOUND BATT INSULATION. PROVIDE 4" VINYL BASE, COLOR TO MATCH EXISTING.

"B" 2- LAYERS 5/8" TYPE X GYPSUM BOARD ONE-SIDE O/ 3-5/8" 20 GAUGE STUDS 24 O.C. W/ 3 1/2" SOUND BATT INSULATION TO UNDERSIDE OF DECK. PROVIDE 4" VINYL BASE, COLOR TO MATCH EXISTING.

GENERAL NOTES:

1. ALL CONSTRUCTION SHALL COMPLY TO THE CURRENT EDITION OF THE OHIO BUILDING CODE, ASHRAE, ADA, AND ANY OR ALL LOCAL ORDINANCES, OR ZONING CODES CURRENTLY IN FORCE.
2. ALL ELECTRICAL WORK SHALL COMPLY WITH THE REQUIREMENTS OF ALL LOCAL ORDINANCES. THE OHIO BASIC BUILDING CODE, AND THE NATIONAL ELECTRIC CODE.
3. THE GENERAL CONTRACTOR IS TO VERIFY ALL DIMENSIONS AND EXISTING CONDITIONS WITH THE DRAWINGS. GENERAL CONTRACTOR IS TO REPORT IMMEDIATELEY TO THE ARCHITECT ANY VARIANCES IN THE PLANS, DETAILS, DIMENSIONS, SPECIFICATIONS, OR FIELD CONDITIONS THAT MAY CAUSE CONSTRUCTION PROBLEMS PRIOR TO COMMENCEMENT OF WORK. GENERAL CONTRACTOR SHALL BE RESPONSIBLE FOR VERIFIYING COMPLIANCE OF SHOP DRAWINGS WITH PLANS, PRIOR TO ORDERING MATERIALS, OR BEGINING WORK. CONTRACTOR SHALL NOTIFY ARCHITECT, PRIOR TO COMMENCEMENT OF WORK, OF ANY DISCREPANCIES AND / OR INCONSISTENCIES, FOR CLARIFICATION OF DESIGN INTENT.
4. IT IS SOLELY THE RESPONSIBILITY OF THE CONTRACTOR, TO FOLLOW ALL THE APPLICABLE SAFETY CODES AND REGULATIONS DURING ALL PHASES OF CONSTRUCTION.
5. CHANGES SHALL NOT BE MADE ON SITE DEVIATING FROM THE CONSTRUCTION DOCUMENTS WITHOUT THE ARCHITECTS PRIOR APPROVAL. FOLLOW THE BEST TRADE AND ENGINEERING PRACTICES FOR THE ITEMS REQUIRED, BUT NOT SPECIFICALY DETAILED AND INDICATED.
6. ALL DIMENSIONS SHALL BE VERIFIED AT THE JOB BY THE GENERAL CONTRACTOR AND EACH SUB-CONTRACTOR. THE ARCHITECT MUST BE NOTIFIED OF ANY DESCREPENCIES BEFORE PROCEEDING WITH THE WORK.
7. IF ANY CONFLICT OR DISCREPANCY EXISTS BETWEEN THESE NOTES, THE GENERAL NOTES, ARCHITECTURAL DRAWINGS OR SPECIFICATIONS, THEN THE STRICTIST PROVISION SHALL GOVERN. IF ANY SUCH CONFLICTS EXIST, THE CONTRACTOR SHALL NOTIFY ARCHITECT FOR CLARIFICATION, PRIOR TO PROCEEDING WITH THE WORK.
8. DO NOT SCALE DRAWINGS; WRITTEN DIMENSIONS GOVERN. IN CASE OF CONFLICT NOTIFY ARCHITECT.
9. THE GENERAL CONTRACTOR SHALL BE RESPONSIBLE TO COORDINATE ALL WORK FOR THE MEANS, METHODS, PROCEDURES, TECHNIQUES, AND SEQUENCES OF CONSTRUCTION. ALL CORRESPONDENCE FROM SUB-CONTRACTORS SHALL BE ROUTED THROUGH THE GENERAL CONTRACTOR.
10. THE CONTRACTOR SHALL MAINTAIN FOR THE ENTIRE DURATION OF THE WORK ALL EXITS, EXIT LIGHTING, FIRE PROTECTION DEVICES, AND ALARMS IN CONFORMANCE WITH ALL APLICABLE CODES AND ORDINANCES.
11. GENERAL CONTRACTOR SHALL BE RESPONSIBLE FOR ALL SCHEDULING AND ALL ON SITE TESTING AND INSPECTIONS.
12. ALL CONTRACTORS SHALL LEAVE THE SITE CLEAN AND FREE OF DEBRIS AND UNUSED MATERIALS.

⬡ CODED NOTES

1. NEW MOVEABLE PARTITION
2. EXISTING HVAC DUCTWORK
3. NEW DUCTWORK AND REGISTER, MATCH EXISTING. CONTRACTOR TO MEASURE AIR QUANTITY FROM EXISTING (6) REGISTERS AND REDISTRIBUTE EQUALLY THROUGH (8) REGISTERS USING BALANCING DAMPERS AT EACH REGISTER.
4. LINE OF NEW SOFFIT ABOVE MOVEABLE PARTITION.
5. NEW PARTITION, SEE PARTITION TYPES SHEET A-110.
6. EXISTING CEILING FAN (VERIFY LOCATION)
7. EXISTING LIGHT FIXTURE
8. RELOCATED EXISTING LIGHT FIXTURE. EXTEND EXISTING WIRE AND CONDUIT TO NEW LOCATION AND RECONNECT.
9. NEW LIGHT FIXTURE (MATCH EXISTING). CIRCUIT NEW LIGHT FIXTURE WITH WIRE AND CONDUIT TO THE EXISTING LIGHT CIRCUIT. IF CIRCUIT AMPS GREATER THAN 80% OF BREAKER SIZE THEN CREATE A NEW CIRCUIT FOR LIGHT FIXTURES IN THE ROOM TO NEW 20A/1P BREAKER IN NEAREST PANEL.
10. RELOCATED EXISTING CEILING FAN. EXTEND WIRE CONDUIT TO NEW LOCATION AND RECONNECT.
11. EXISTING EXPOSED CEILING
12. NEW GYP. BD. SOFFIT
13. EXISTING DUCTWORK TO BE DEMOLISHED/RELOCATED, PROVIDE FLEXIBLE SEALED CONNECTION AT NEW JOINT
14. EXISTING CMU PARTITION, PROVIDE BEARING PLATE FOR NEW BEAM
15. NEW BEAM, BOT. OF STEEL AT 10'-3 3/8" A.F.F.
16. EXISTING PARTITION
17. PROVIDE FLANGE TO FLANGE WALL SLEEVE AT DUCTWORK PENETRATION OF NEW PARTITION, INSTALL FLANGE WITH ACOUSTICAL SEALANT.
18. REWIRE LIGHT SWITCHES IN LARGE MUTLI-PURPOSE ROOM 114A TO CONTROL 4 LIGHT FIXTURES IN 114A. REWIRE LIGHT SWITCHES IN LARGE MUTLI-PURPOSE ROOM 114B LIGHT SWITCHES TO CONTROL THOSE 4 LIGHT FIXTURES IN 114B.
19. EXISTING CEILING FAN TO BE DISCONNECTED AND REMOVED. MAINTAIN EXISTING FAN CIRCUIT AND DEMOLISH ANY WIRE AND CONDUIT BACK TO NEXT CEILING FAN.
20. PROVIDE DEEP DEFLECTION TRACK TO ALLOW ROOF DEFLECTION, HOLD GYP. BD. DOWN ¾", SEAL JOINT W/ BACKER ROD AND FLEXIBLE CAULK.
21. REMOVE AND RELOCATE EXISTING REGISTER, PATCH AND REPAIR TO MATCH EXISTING PARTITION.

REVISIONS

REV#	DATE	REMARKS

STATE OF OHIO
ALI ALGHOTHANI
E-57345
REGISTERED PROFESSIONAL ENGINEER

STAR CONSULTANTS, INC
ARCHITECTS & ENGINEERS
design | strategy | vision
5910 Crown Park Ct. Columbus, OH 43235
Tel: 614.538.8445 Fax: 614.538.8446
www.starconsultants.org

DRC-19L002

BELMONT CORRECTIONAL INSTITUTION
RECOVERY SERVICES MOVEABLE PARTITION, BLDG 5B
68518 BANNOCK ROAD, S.R. 331
ST. CLAIRSVILLE, BELMONT COUNTY

FIRST FLOOR REFLECTED CEILING PLAN

PJT #:	
DATE:	
DRN. BY:	INITIAL
DGN. BY:	INITIAL
REV. BY:	INITIAL

SHEET
A-111

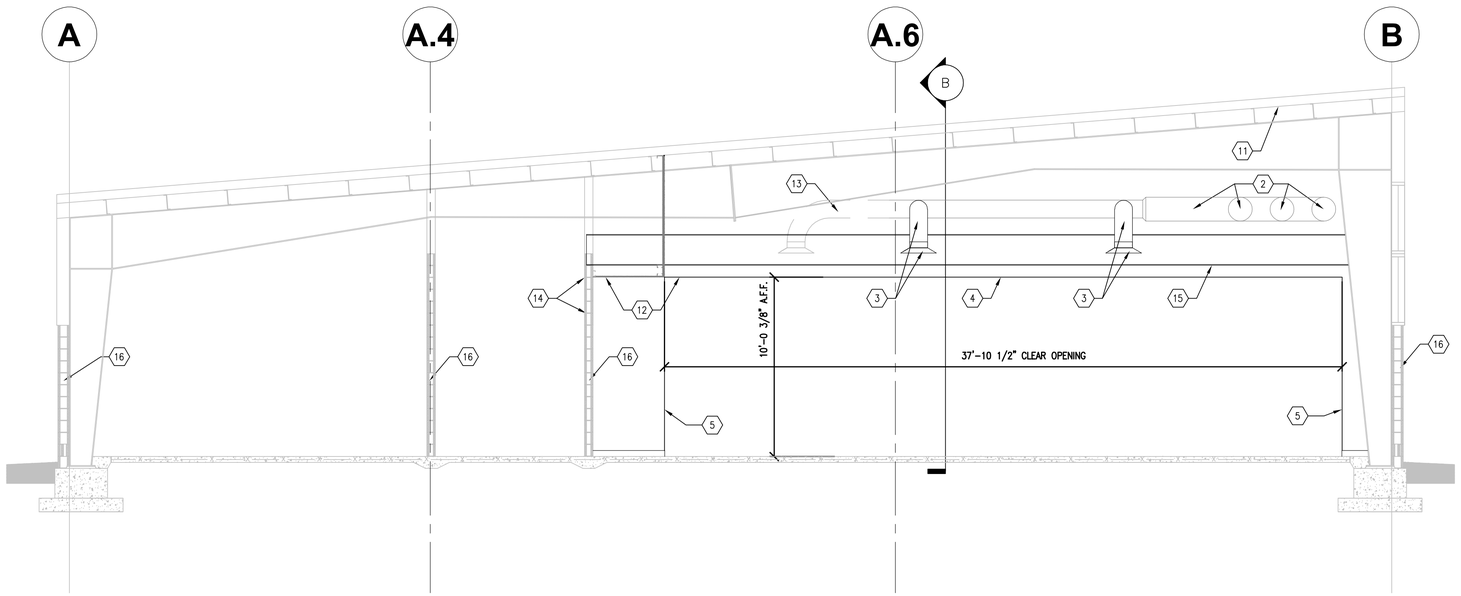

A BUILDING SECTION A
1/4" = 1'-0"

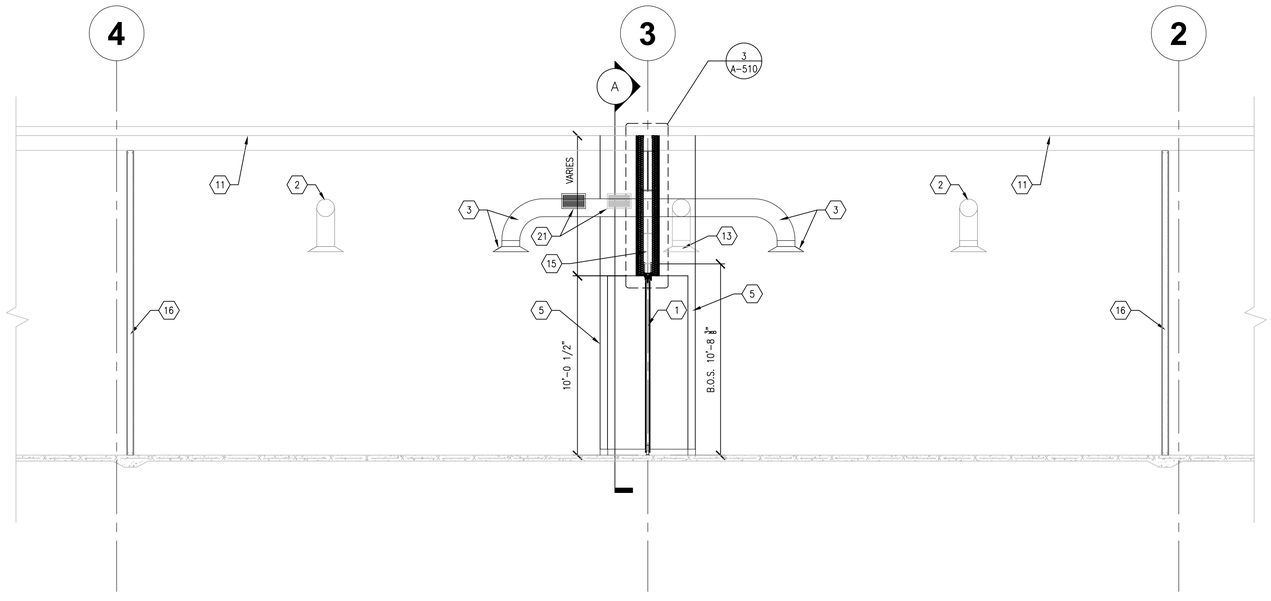

B BUILDING SECTION B
1/4" = 1'-0"

GENERAL NOTES:

1. ALL CONSTRUCTION SHALL COMPLY TO THE CURRENT EDITION OF THE OHIO BUILDING CODE, ASHRAE, ADA, AND ANY OR ALL LOCAL ORDINANCES, OR ZONING CODES CURRENTLY IN FORCE.
2. ALL ELECTRICAL WORK SHALL COMPLY WITH THE REQUIREMENTS OF ALL LOCAL ORDINANCES. THE OHIO BASIC BUILDING CODE, AND THE NATIONAL ELECTRIC CODE.
3. THE GENERAL CONTRACTOR IS TO VERIFY ALL DIMENSIONS AND EXISTING CONDITIONS WITH THE DRAWINGS. GENERAL CONTRACTOR IS TO REPORT IMMEDIATELEY TO THE ARCHITECT ANY VARIANCES IN THE PLANS, DETAILS, DIMENSIONS, SPECIFICATIONS, OR FIELD CONDITIONS THAT MAY CAUSE CONSTRUCTION PROBLEMS PRIOR TO COMMENCEMENT OF WORK. GENERAL CONTRACTOR SHALL BE RESPONSIBLE FOR VERIFYING COMPLIANCE OF SHOP DRAWINGS WITH PLANS, PRIOR TO ORDERING MATERIALS, OR BEGINING WORK. CONTRACTOR SHALL NOTIFY ARCHITECT, PRIOR TO COMMENCEMENT OF WORK, OF ANY DISCREPANCIES AND / OR INCONSISTENCIES, FOR CLARIFICATION OF DESIGN INTENT.
4. IT IS SOLELY THE RESPONSIBILITY OF THE CONTRACTOR, TO FOLLOW ALL THE APPLICABLE SAFETY CODES AND REGULATIONS DURING ALL PHASES OF CONSTRUCTION.
5. CHANGES SHALL NOT BE MADE ON SITE DEVIATING FROM THE CONSTRUCTION DOCUMENTS WITHOUT THE ARCHITECTS PRIOR APPROVAL. FOLLOW THE BEST TRADE AND ENGINEERING PRACTICES FOR THE ITEMS REQUIRED, BUT NOT SPECIFICALY DETAILED AND INDICATED.
6. ALL DIMENSIONS SHALL BE VERIFIED AT THE JOB BY THE GENERAL CONTRACTOR AND EACH SUB-CONTRACTOR. THE ARCHITECT MUST BE NOTIFIED OF ANY DESCREPENCIES BEFORE PROCEEDING WITH THE WORK.
7. IF ANY CONFLICT OR DISCREPANCY EXISTS BETWEEN THESE NOTES, THE GENERAL NOTES, ARCHITECTURAL DRAWINGS OR SPECIFICATIONS, THEN THE STRICTIST PROVISION SHALL GOVERN. IF ANY SUCH CONFLICTS EXIST, THE CONTRACTOR SHALL NOTIFY ARCHITECT FOR CLARIFICATION, PRIOR TO PROCEEDING WITH THE WORK.
8. DO NOT SCALE DRAWINGS; WRITTEN DIMENSIONS GOVERN. IN CASE OF CONFLICT NOTIFY ARCHITECT.
9. THE GENERAL CONTRACTOR SHALL BE RESPONSIBLE TO COORDINATE ALL WORK FOR THE MEANS, METHODS, PROCEDURES, TECHNIQUES, AND SEQUENCES OF CONSTRUCTION. ALL CORRESPONDENCE FROM SUB-CONTRACTORS SHALL BE ROUTED THROUGH THE GENERAL CONTRACTOR.
10. THE CONTRACTOR SHALL MAINTAIN FOR THE ENTIRE DURATION OF THE WORK ALL EXITS, EXIT LIGHTING, FIRE PROTECTION DEVICES, AND ALARMS IN CONFORMANCE WITH ALL APLICABLE CODES AND ORDINANCES.
11. GENERAL CONTRACTOR SHALL BE RESPONSIBLE FOR ALL SCHEDULING AND ALL ON SITE TESTING AND INSPECTIONS.
12. ALL CONTRACTORS SHALL LEAVE THE SITE CLEAN AND FREE OF DEBRIS AND UNUSED MATERIALS.

⬡ CODED NOTES

1. NEW MOVEABLE PARTITION
2. EXISTING HVAC DUCTWORK
3. NEW DUCTWORK AND REGISTER, MATCH EXISTING. CONTRACTOR TO MEASURE AIR QUANTITY FROM EXISTING (6) REGISTERS AND REDISTRIBUTE EQUALLY THROUGH (8) REGISTERS USING BALANCING DAMPERS AT EACH REGISTER.
4. LINE OF NEW SOFFIT ABOVE MOVEABLE PARTITION.
5. NEW PARTITION, SEE PARTITION TYPES SHEET A-110.
6. EXISTING CEILING FAN (VERIFY LOCATION)
7. EXISTING LIGHT FIXTURE
8. RELOCATED EXISTING LIGHT FIXTURE. EXTEND EXISTING WIRE AND CONDUIT TO NEW LOCATION AND RECONNECT.
9. NEW LIGHT FIXTURE (MATCH EXISTING). CIRCUIT NEW LIGHT FIXTURE WITH WIRE AND CONDUIT TO THE EXISTING LIGHT CIRCUIT. IF CIRCUIT AMPS GREATER THAN 80% OF BREAKER SIZE THEN CREATE A NEW CIRCUIT FOR LIGHT FIXTURES IN THE ROOM TO NEW 20A/1P BREAKER IN NEAREST PANEL.
10. RELOCATED EXISTING CEILING FAN. EXTEND WIRE CONDUIT TO NEW LOCATION AND RECONNECT.
11. EXISTING EXPOSED CEILING
12. NEW GYP. BD. SOFFIT
13. EXISTING DUCTWORK TO BE DEMOLISHED/RELOCATED, PROVIDE FLEXIBLE SEALED CONNECTION AT NEW JOINT
14. EXISTING CMU PARTITION, PROVIDE BEARING PLATE FOR NEW BEAM
15. NEW BEAM, BOT. OF STEEL AT 10'-3 3/8" A.F.F.
16. EXISTING PARTITION
17. PROVIDE FLANGE TO FLANGE WALL SLEEVE AT DUCTWORK PENETRATION OF NEW PARTITION, INSTALL FLANGE WITH ACOUSTICAL SEALANT.
18. REWIRE LIGHT SWITCHES IN LARGE MUTLI-PURPOSE ROOM 114A TO CONTROL 4 LIGHT FIXTURES IN 114A. REWIRE LIGHT SWITCHES IN LARGE MUTLI-PURPOSE ROOM 114B LIGHT SWITCHES TO CONTROL THOSE 4 LIGHT FIXTURES IN 114B.
19. EXISTING CEILING FAN TO BE DISCONNECTED AND REMOVED. MAINTAIN EXISTING FAN CIRCUIT AND DEMOLISH ANY WIRE AND CONDUIT BACK TO NEXT CEILING FAN.
20. PROVIDE DEEP DEFLECTION TRACK TO ALLOW ROOF DEFLECTION, HOLD GYP. BD. DOWN ⅜", SEAL JOINT W/ BACKER ROD AND FLEXIBLE CAULK.
21. REMOVE AND RELOCATE EXISTING REGISTER, PATCH AND REPAIR TO MATCH EXISTING PARTITION.

REVISIONS

REV#	DATE	REMARKS

STATE OF OHIO
ALI ALGHOTHANI
E-57345
REGISTERED PROFESSIONAL ENGINEER

STAR CONSULTANTS, INC
ARCHITECTS & ENGINEERS
design | strategy | vision
1910 Crown Park Ct. Columbus, OH 43235
Tel: 614.538.8445 Fax: 614.538.8446
www.starconsultants.org

DRC-19L002

BELMONT CORRECTIONAL INSTITUTION
RECOVERY SERVICES MOVEABLE PARTITION, BLDG 5B
68518 BANNOCK ROAD, S.R. 331
ST. CLAIRSVILLE, BELMONT COUNTY

BUILDING SECTIONS

PJT #:	
DATE:	
DRN. BY:	INITIAL
DGN. BY:	INITIAL
REV. BY:	INITIAL

SHEET
A-300

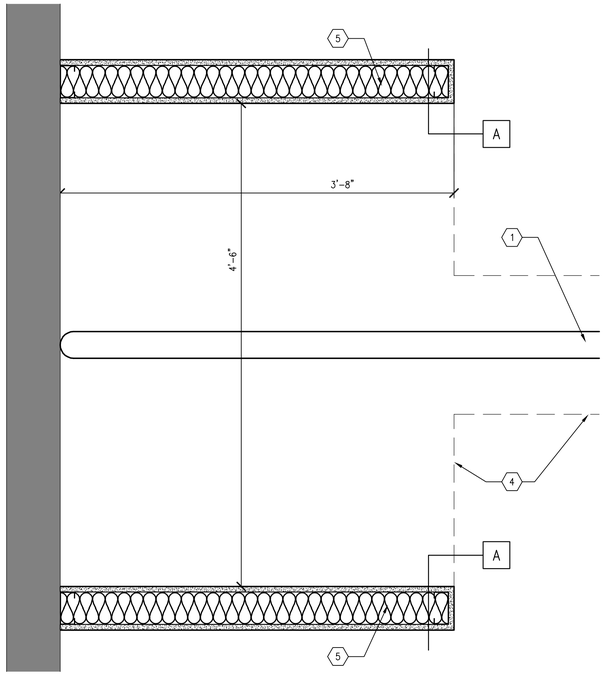

1 PLAN DETAIL
1-1/2" = 1'-0"

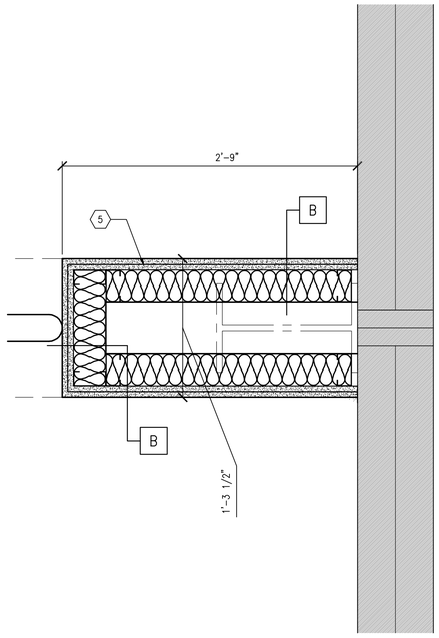

2 PLAN DETAIL
1-1/2" = 1'-0"

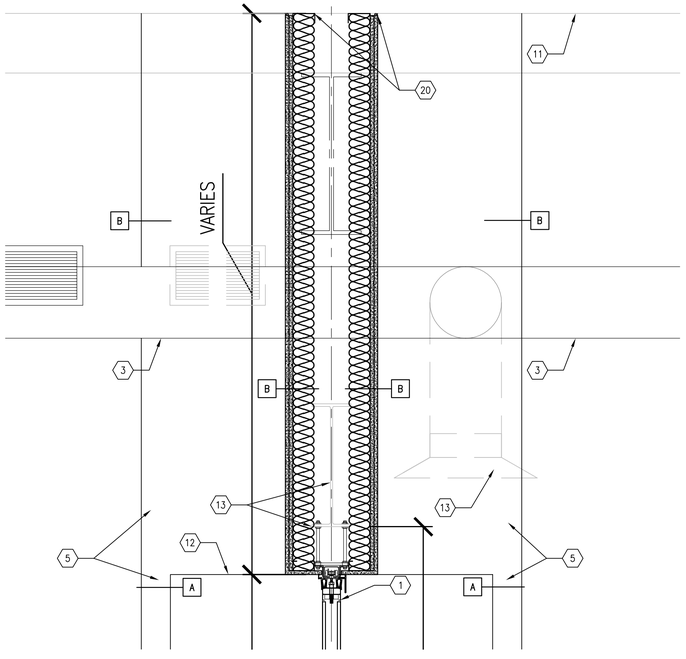

3 DETAIL
1" = 1'-0"

GENERAL NOTES:

1. ALL CONSTRUCTION SHALL COMPLY TO THE CURRENT EDITION OF THE OHIO BUILDING CODE, ASHRAE, ADA, AND ANY OR ALL LOCAL ORDINANCES, OR ZONING CODES CURRENTLY IN FORCE.
2. ALL ELECTRICAL WORK SHALL COMPLY WITH THE REQUIREMENTS OF ALL LOCAL ORDINANCES. THE OHIO BASIC BUILDING CODE, AND THE NATIONAL ELECTRIC CODE.
3. THE GENERAL CONTRACTOR IS TO VERIFY ALL DIMENSIONS AND EXISTING CONDITIONS WITH THE DRAWINGS. GENERAL CONTRACTOR IS TO REPORT IMMEDIATELEY TO THE ARCHITECT ANY VARIANCES IN THE PLANS, DETAILS, DIMENSIONS, SPECIFICATIONS, OR FIELD CONDITIONS THAT MAY CAUSE CONSTRUCTION PROBLEMS PRIOR TO COMMENCEMENT OF WORK. GENERAL CONTRACTOR SHALL BE RESPONSIBLE FOR VERIFYING COMPLIANCE OF SHOP DRAWINGS WITH PLANS, PRIOR TO ORDERING MATERIALS, OR BEGINING WORK. CONTRACTOR SHALL NOTIFY ARCHITECT, PRIOR TO COMMENCEMENT OF WORK, OF ANY DISCREPANCIES AND / OR INCONSISTENCIES, FOR CLARIFICATION OF DESIGN INTENT.
4. IT IS SOLELY THE RESPONSIBILITY OF THE CONTRACTOR, TO FOLLOW ALL THE APPLICABLE SAFETY CODES AND REGULATIONS DURING ALL PHASES OF CONSTRUCTION.
5. CHANGES SHALL NOT BE MADE ON SITE DEVIATING FROM THE CONSTRUCTION DOCUMENTS WITHOUT THE ARCHITECTS PRIOR APPROVAL. FOLLOW THE BEST TRADE AND ENGINEERING PRACTICES FOR THE ITEMS REQUIRED, BUT NOT SPECIFICALY DETAILED AND INDICATED.
6. ALL DIMENSIONS SHALL BE VERIFIED AT THE JOB BY THE GENERAL CONTRACTOR AND EACH SUB-CONTRACTOR. THE ARCHITECT MUST BE NOTIFIED OF ANY DESCREPENCIES BEFORE PROCEEDING WITH THE WORK.
7. IF ANY CONFLICT OR DISCREPANCY EXISTS BETWEEN THESE NOTES, THE GENERAL NOTES, ARCHITECTURAL DRAWINGS OR SPECIFICATIONS, THEN THE STRICTIST PROVISION SHALL GOVERN. IF ANY SUCH CONFLICTS EXIST, THE CONTRACTOR SHALL NOTIFY ARCHITECT FOR CLARIFICATION, PRIOR TO PROCEEDING WITH THE WORK.
8. DO NOT SCALE DRAWINGS; WRITTEN DIMENSIONS GOVERN. IN CASE OF CONFLICT NOTIFY ARCHITECT.
9. THE GENERAL CONTRACTOR SHALL BE RESPONSIBLE TO COORDINATE ALL WORK FOR THE MEANS, METHODS, PROCEDURES, TECHNIQUES, AND SEQUENCES OF CONSTRUCTION. ALL CORRESPONDENCE FROM SUB-CONTRACTORS SHALL BE ROUTED THROUGH THE GENERAL CONTRACTOR.
10. THE CONTRACTOR SHALL MAINTAIN FOR THE ENTIRE DURATION OF THE WORK ALL EXITS, EXIT LIGHTING, FIRE PROTECTION DEVICES, AND ALARMS IN CONFORMANCE WITH ALL APLICABLE CODES AND ORDINANCES.
11. GENERAL CONTRACTOR SHALL BE RESPONSIBLE FOR ALL SCHEDULING AND ALL ON SITE TESTING AND INSPECTIONS.
12. ALL CONTRACTORS SHALL LEAVE THE SITE CLEAN AND FREE OF DEBRIS AND UNUSED MATERIALS.

⬡ CODED NOTES

1. NEW MOVEABLE PARTITION
2. EXISTING HVAC DUCTWORK
3. NEW DUCTWORK AND REGISTER, MATCH EXISTING. CONTRACTOR TO MEASURE AIR QUANTITY FROM EXISTING (6) REGISTERS AND REDISTRIBUTE EQUALLY THROUGH (8) REGISTERS USING BALANCING DAMPERS AT EACH REGISTER.
4. LINE OF NEW SOFFIT ABOVE MOVEABLE PARTITION.
5. NEW PARTITION, SEE PARTITION TYPES SHEET A-110.
6. EXISTING CEILING FAN (VERIFY LOCATION)
7. EXISTING LIGHT FIXTURE
8. RELOCATED EXISTING LIGHT FIXTURE. EXTEND EXISTING WIRE AND CONDUIT TO NEW LOCATION AND RECONNECT.
9. NEW LIGHT FIXTURE (MATCH EXISTING). CIRCUIT NEW LIGHT FIXTURE WITH WIRE AND CONDUIT TO THE EXISTING LIGHT CIRCUIT. IF CIRCUIT AMPS GREATER THAN 80% OF BREAKER SIZE THEN CREATE A NEW CIRCUIT FOR LIGHT FIXTURES IN THE ROOM TO NEW 20A/1P BREAKER IN NEAREST PANEL.
10. RELOCATED EXISTING CEILING FAN. EXTEND WIRE CONDUIT TO NEW LOCATION AND RECONNECT.
11. EXISTING EXPOSED CEILING
12. NEW GYP. BD. SOFFIT
13. EXISTING DUCTWORK TO BE DEMOLISHED/RELOCATED, PROVIDE FLEXIBLE SEALED CONNECTION AT NEW JOINT
14. EXISTING CMU PARTITION, PROVIDE BEARING PLATE FOR NEW BEAM
15. NEW BEAM, BOT. OF STEEL AT 10'-3 3/8" A.F.F.
16. EXISTING PARTITION
17. PROVIDE FLANGE TO FLANGE WALL SLEEVE AT DUCTWORK PENETRATION OF NEW PARTITION, INSTALL FLANGE WITH ACOUSTICAL SEALANT.
18. REWIRE LIGHT SWITCHES IN LARGE MUTLI-PURPOSE ROOM 114A TO CONTROL 4 LIGHT FIXTURES IN 114A. REWIRE LIGHT SWITCHES IN LARGE MUTLI-PURPOSE ROOM 114B LIGHT SWITCHES TO CONTROL THOSE 4 LIGHT FIXTURES IN 114B.
19. EXISTING CEILING FAN TO BE DISCONNECTED AND REMOVED. MAINTAIN EXISTING FAN CIRCUIT AND DEMOLISH ANY WIRE AND CONDUIT BACK TO NEXT CEILING FAN.

REVISIONS

REV#	DATE	REMARKS

STATE OF OHIO
ALI ALGHOTHANI
E-57345
REGISTERED PROFESSIONAL ENGINEER

STAR CONSULTANTS, INC
ARCHITECTS & ENGINEERS
design | strategy | vision
1910 Crown Park Ct. Columbus, OH 43235
Tel: 614.538.8445 Fax: 614.538.8446
www.starconsultants.org

DRC-19L002
BELMONT CORRECTIONAL INSTITUTION
RECOVERY SERVICES MOVEABLE PARTITION, BLDG 5B
68518 BANNOCK ROAD, S.R. 331
ST. CLAIRSVILLE, BELMONT COUNTY

PLAN DETAILS

PJT #:	
DATE:	
DRN. BY:	**INITIAL**
DGN. BY:	**INITIAL**
REV. BY:	**INITIAL**

SHEET
A-510

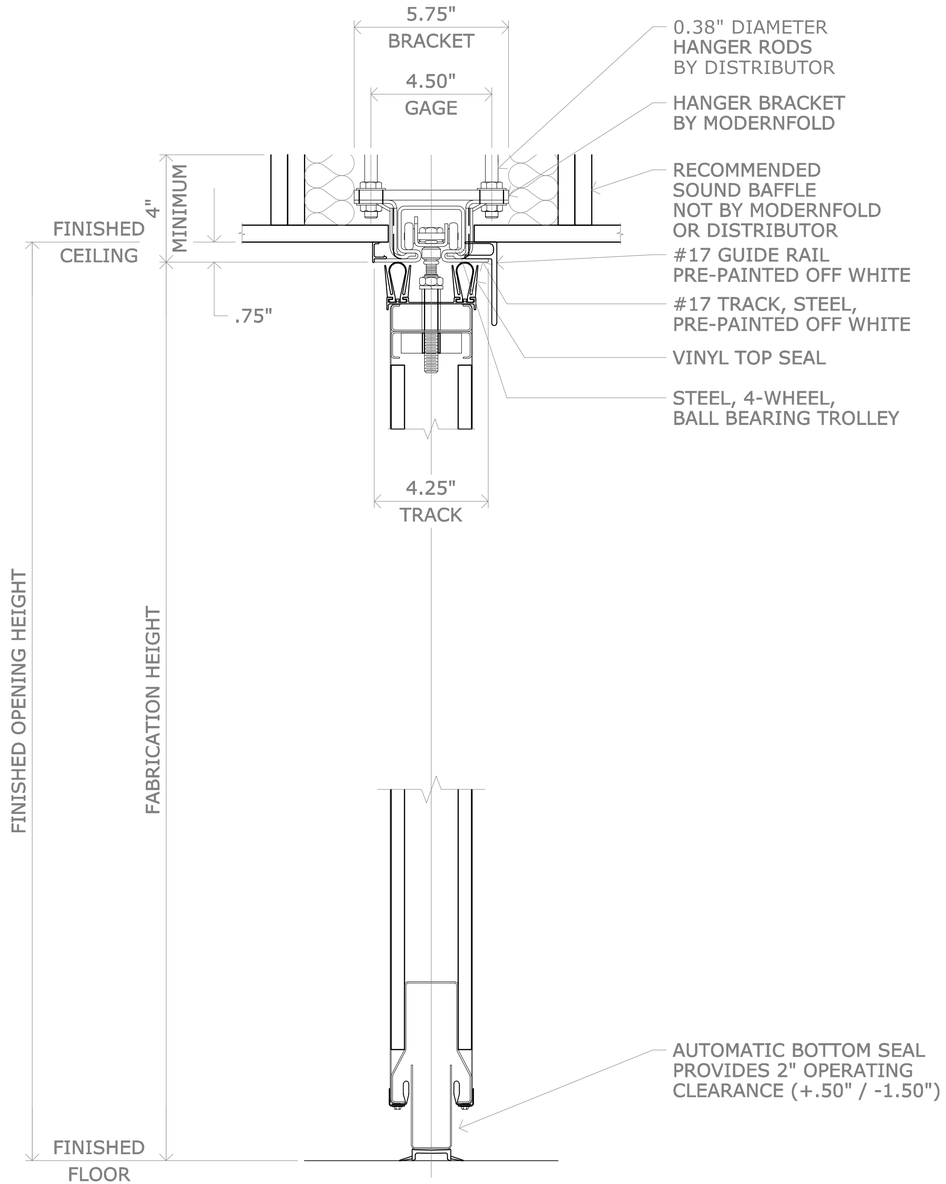

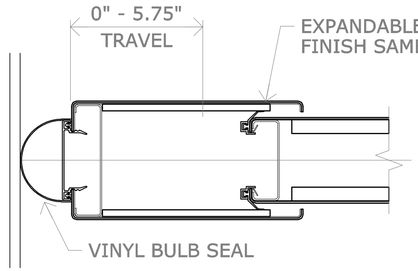

EXPANDABLE PANEL WITH BULB SEAL

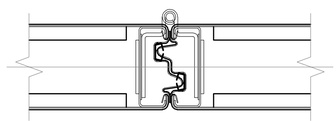

HINGED PANEL JOINT

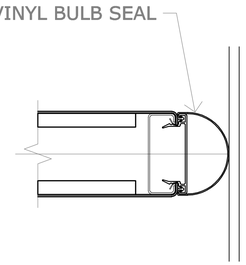

BULB SEAL

A MOVEABLE PARTITION DETAILS
NTS

REVISIONS

REV#	DATE	REMARKS

STATE OF OHIO
ALI ALGHOTHANI
E-57345
REGISTERED PROFESSIONAL ENGINEER
5910 Crown Park Ct. · Columbus, OH 43235
Tel: 614.538.8445 · Fax: 614.538.8446
www.starconsultants.org
STAR CONSULTANTS, INC
ARCHITECTS & ENGINEERS
design | strategy | vision

DRC-19L002
BELMONT CORRECTIONAL INSTITUTION
RECOVERY SERVICES MOVEABLE PARTITION, BLDG 5B
68518 BANNOCK ROAD, S.R. 331
ST. CLAIRSVILLE, BELMONT COUNTY

MOVEABLE PARTITION DETAILS

PJT #:	
DATE:	
DRN. BY:	INITIAL
DGN. BY:	INITIAL
REV. BY:	INITIAL

SHEET
A-710

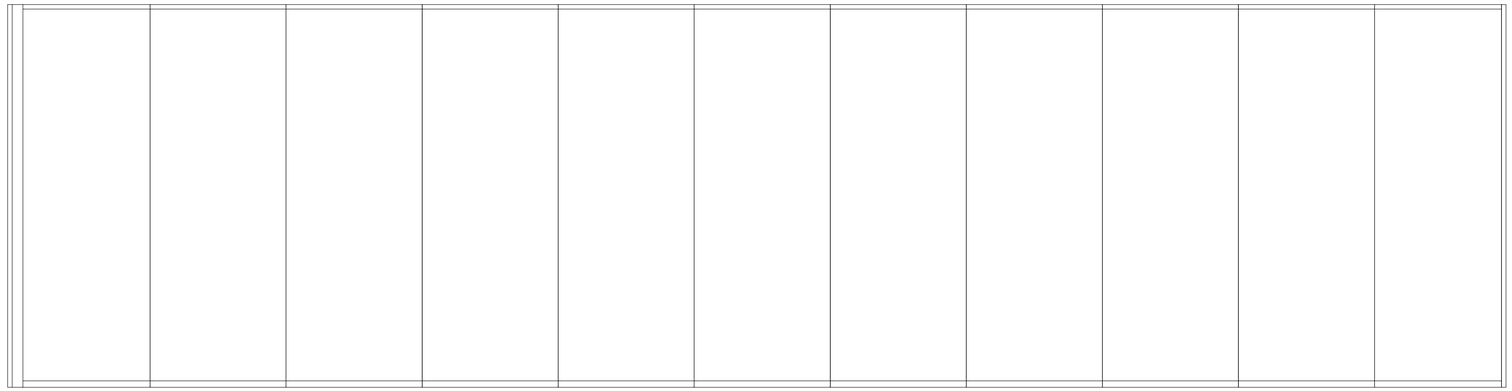

PANEL ELEVATION - SIDE "L"

Ⓐ MOVEABLE PARTITION DETAILS
NTS

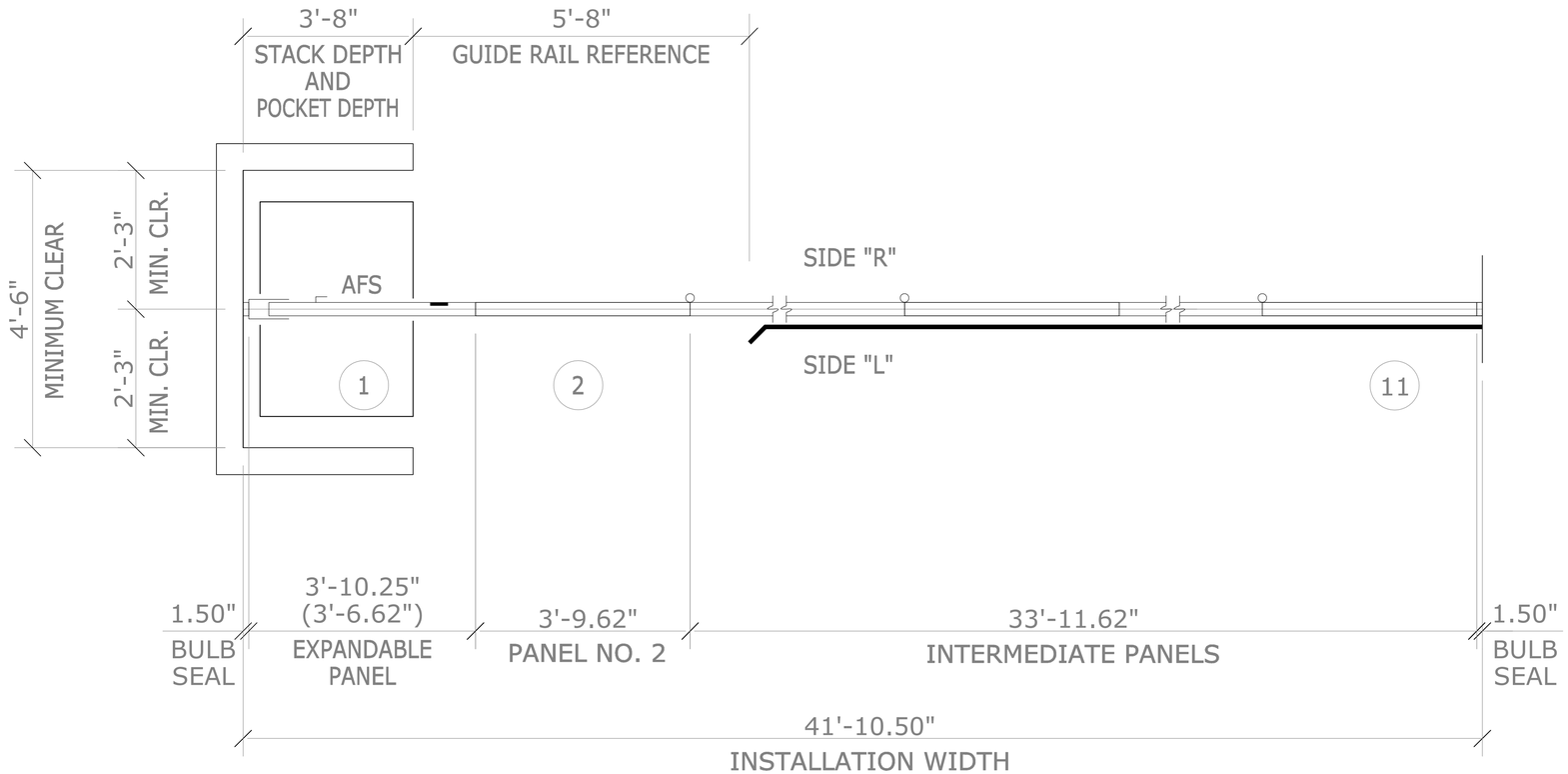

PANEL PLAN

Ⓑ MOVEABLE PARTITION DETAILS
NTS

REVISIONS

REV#	DATE	REMARKS

STATE OF OHIO
ALI ALGHOTHANI
E-57345
REGISTERED PROFESSIONAL ENGINEER

STAR CONSULTANTS, INC
ARCHITECTS & ENGINEERS
design | strategy | vision
1910 Crown Park Ct. · Columbus, OH 43235
Tel: 614.538.8445 · Fax: 614.538.8446
www.starconsultants.org

DRC-19L002
BELMONT CORRECTIONAL INSTITUTION
RECOVERY SERVICES MOVEABLE PARTITION, BLDG 5B
68518 BANNOCK ROAD, S.R. 331
ST. CLAIRSVILLE, BELMONT COUNTY

MOVEABLE PARTITION DETAILS

PJT #:	
DATE:	
DRN. BY:	INITIAL
DGN. BY:	INITIAL
REV. BY:	INITIAL

SHEET
A-711

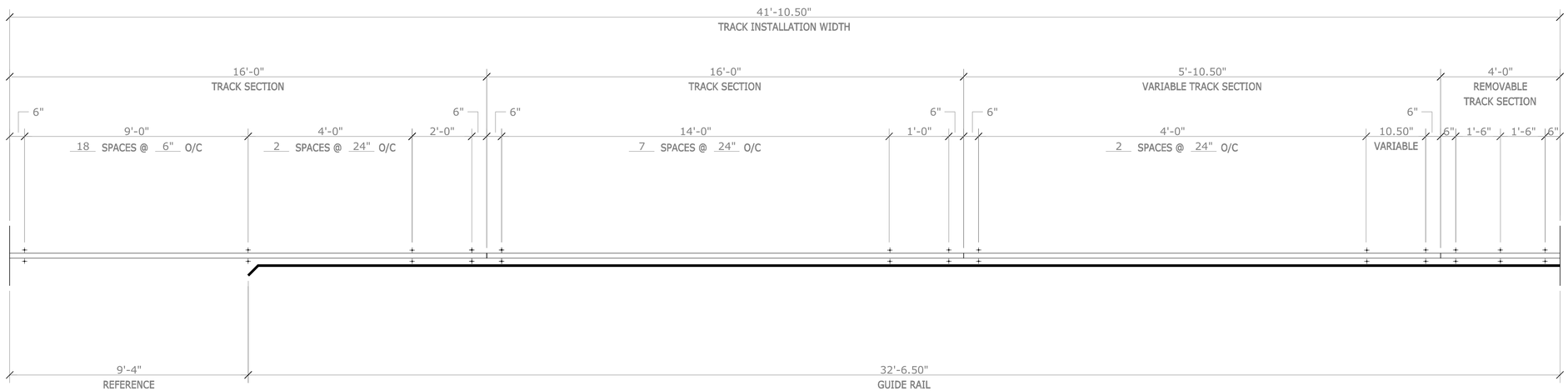

A MOVEABLE PARTITION TRACK LAYOUT
NTS

REVISIONS

REV#	DATE	REMARKS

STATE OF OHIO
ALI ALGHOTHANI
E-57345
REGISTERED PROFESSIONAL ENGINEER

STAR CONSULTANTS, INC
ARCHITECTS & ENGINEERS
design | strategy | vision
6910 Crown Park Ct. - Columbus, OH 43235
Tel: 614.538.8445 Fax: 614.538.8446
www.starconsultants.org

DRC-19L002

BELMONT CORRECTIONAL INSTITUTION
RECOVERY SERVICES MOVEABLE PARTITION, BLDG 5B
68518 BANNOCK ROAD, S.R. 331
ST. CLAIRSVILLE, BELMONT COUNTY

MOVEABLE PARTITION DETAILS

PJT #:	
DATE:	
DRN. BY:	INITIAL
DGN. BY:	INITIAL
REV. BY:	INITIAL

SHEET
A-712

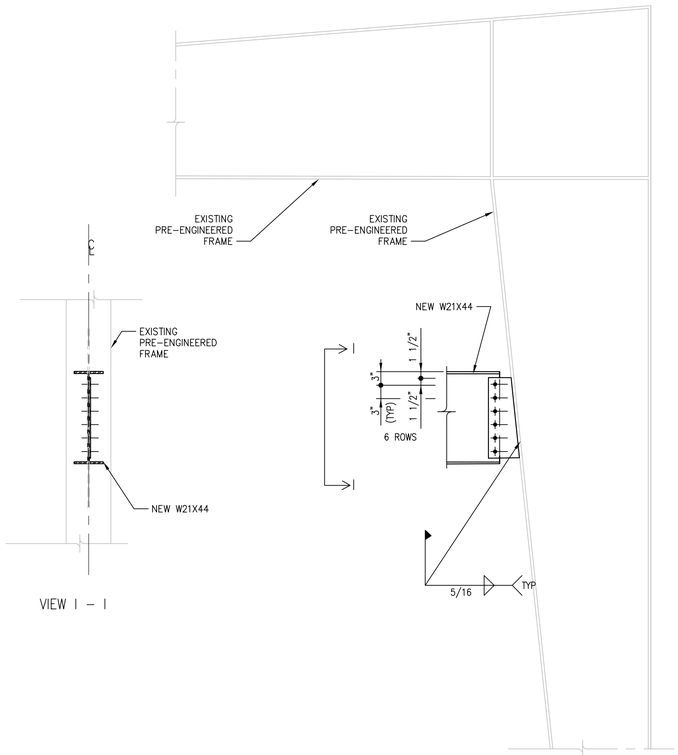

VIEW I – I

A BUILDING SECTION A
1/4" = 1'-0"

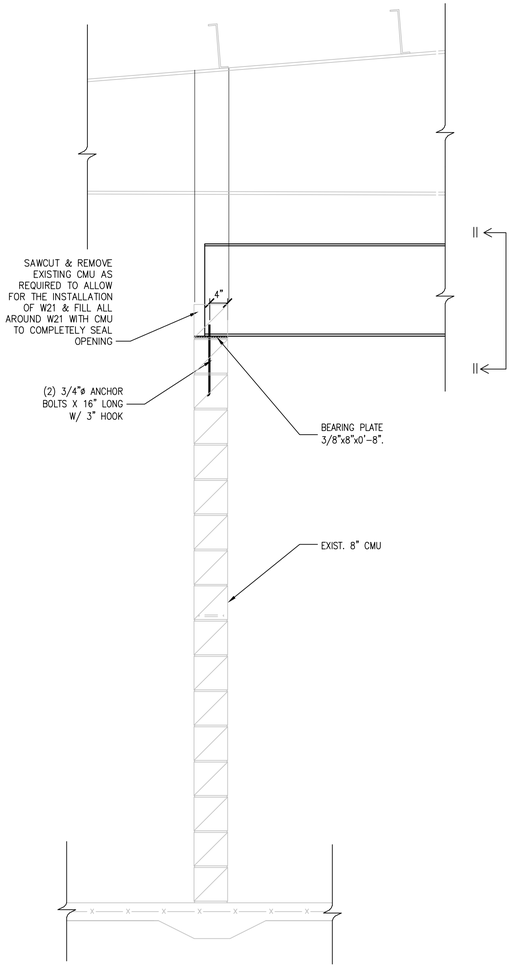

B BUILDING SECTION A
1/4" = 1'-0"

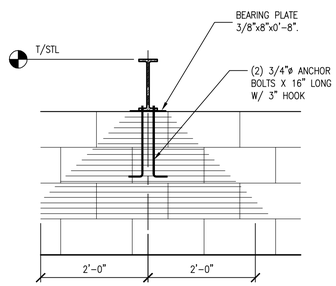

NOTE:
ALL MASONRY UNITS ENTIRELY OR PARTIALLY IN SHADED AREA SHALL BE GROUT FILLED HOLLOW CORE BLOCK

VIEW II – II

GENERAL STRUCTURAL NOTES

BUILDING CODE

- 2017 OHIO BUILDING CODE (OBC-2017).
- ASCE STANDARDS (ASCE/SEI 7-10), MINIMUM DESIGN LOADS FOR BUILDINGS AND OTHER STRUCTURES.

CONSTRUCTION AND SAFETY

1. THE STRUCTURE IS DESIGNED TO BE STABLE AND SELF SUPPORTING WHEN COMPLETED. THE CONTRACTOR SHALL BE RESPONSIBLE FOR ALL CONSTRUCTION PROCEDURES REQUIRED TO BUILD THE STRUCTURE AND TO ENSURE SAFETY DURING DEMOLITION AND CONSTRUCTION. THIS INCLUDES, BUT IS NOT LIMITED TO, TEMPORARY BRACING, SHORING AND RESHORING REQUIREMENTS, CONSTRUCTION LOADS, UNDER-PINNING, ETC.
2. THE CONTRACTOR SHALL COORDINATE HIS WORK WITH THE OWNER PROJECT MANAGER TO MINIMIZE INTERFERENCE WITH OPERATIONS AND TO INSURE THE SAFETY OF ALL PERSONNEL.
3. THE ENGINEER SHALL NOT BE RESPONSIBLE FOR THE MEANS, METHODS, TECHNIQUES, SEQUENCES OR PROCEDURES OF CONSTRUCTION SELECTED BY CONTRACTOR.
4. THE CONTRACTOR SHALL BE SOLELY AND COMPLETELY RESPONSIBLE FOR CONDITIONS OF THE JOB SITE INCLUDING SAFETY OF ALL PERSONS AND PROPERTY DURING PERFORMANCE OF THE WORK. THIS REQUIREMENT SHALL APPLY CONTINUOUSLY AND NOT BE LIMITED TO NORMAL WORKING HOURS. WHEN ON SITE, THE ENGINEER IS RESPONSIBLE FOR HIS/HER OWN SAFETY BUT HAS NO RESPONSIBILITY FOR THE SAFETY OF OTHER PERSONNEL OR SAFETY CONDITIONS AT THE SITE.
5. THE CONTRACTOR SHALL VERIFY ALL EXISTING CONDITIONS AND DIMENSIONS PRIOR TO THE PREPARATION OF SHOP DRAWINGS. SHOULD ANY DISCREPANCY BE FOUND, THE CONTRACTOR SHALL NOTIFY THE ENGINEER IMMEDIATELY.
6. QUALITY OF CONSTRUCTION REQUIRED. PERFORMANCE LEVELS OF WORKMANSHIP. MANUFACTURING AND INDUSTRY STANDARDS. STRENGTH AND PHYSICAL REQUIREMENTS OF MATERIALS. CONFORMANCE TO CODES AND REGULATIONS. GUARANTEE REQUIREMENTS AND OTHER PERTINENT INFORMATION ARE CONTAINED IN THE PROJECT MANUAL.
7. IF MATERIALS, QUANTITIES, STRENGTHS OR SIZES INDICATED BY THE DRAWINGS OR SPECIFICATIONS ARE NOT IN AGREEMENT WITH THESE NOTES, THE BETTER QUALITY AND/OR GREATER QUANTITY, STRENGTH OR SIZE INDICATED, SPECIFIED OR NOTED SHALL BE PROVIDED.
8. COORDINATE WITH ALL DRAWINGS FOR PERTINENT INFORMATION RELATED TO STRUCTURAL WORK. ANY CHANGES TO THE STRUCTURAL SYSTEMS SHALL BE REDESIGNED BY A PROFESSIONAL ENGINEER AT NO COST TO THE OWNER OR A/E AND SUBMITTED TO THE A/E FOR REVIEW. SUBMITTAL SHALL BE ACKNOWLEDGED IN WRITING BEFORE BEGINNING CONSTRUCTION.
9. EQUIPMENT FRAMING, LOADS, OPENINGS AND STRUCTURE IN ANY WAY RELATED TO HVAC, PLUMBING, OR ELECTRICAL REQUIREMENTS ARE SHOWN FOR BIDDING PURPOSES ONLY. CONTRACTOR SHALL OBTAIN APPROVAL OF THE INVOLVED TRADES BEFORE PROCEEDING WITH SUCH PORTION OF THE WORK. EXCESS COST RELATED TO VARIATION IN THESE REQUIREMENTS TO BE BORNE BY THE APPROPRIATE CONTRACTOR.

DESIGN LOADS

OCCUPANCY CATEGORY, TABLE 1604.5 – II

1. LIVE LOADS (SECTION 1607):
   ROOF LIVE LOAD 20 PSF
   MOVABLE PARTITION WALL 10 PSF PER WALL
2. SNOW LOAD (OHIO BUILDING CODE-2017, SECTION 1609):
   SNOW LOAD, Pg = 20 PSF
   SNOW DRIFT ON LOWER ROOF, Hd= 64 PSF
   WIDTH OF DRIFT, Wd= 15 FT
3. WIND LOAD (OBC-2017, SECTION 1609):

i. BASIC WIND SPEED (3 SECOND GUST), 115 MPH, qz = 24.5 PSF
ii. WIND IMPORTANCE FACTOR, Iw = 1
iii. BUILDING OCCUPANCY CATEGORY = II
iv. WIND EXPOSURE CATEGORY = C
v. Kh =0.98, G = 1.26
vi. WINDWARD, P = 33.5 PSF
vii. LEEWARD, P = 22.8 PSF
vij. ROOF PRESSURE P = 37.1 PSF
ix. INTERNAL PRESSURE COEFFICIENT, Gcpi = +/-0.18 (ENCLOSED BUILDING)

4. EARTHQUAKE DESIGN DATA (SECTION 161.3):
   SEISMIC LOADS

i. OCCUPANCY CATEGORY = IV
j. MAPPED SPECTRAL RESPONSE: Ss = 0.192 ; S1 = 0.052
iv. SITE CLASS = D
v. SPECTRAL RESPONSE COEFFICIENTS: SDS = 0.205 ; SD1 = 0.083
w. SEISMIC DESIGN CATEGORY = C
vii. BASIC SEISMIC FORCE RESISTING SYSTEM = ORDINARY STEEL MOMENT FRAMES
viii. SEISMIC RESPONSE COEFFICIENT, Cs = 0.68
ix. RESPONSE MODIFICATION FACTOR, R = 3.5

ANALYSIS PROCEDURE = EQUIVALENT LATERAL FORCE METHOD

5. DEAD LOADS:

PRE-ENGINEERED ROOF:

a.	MEMBRANE ROOF	3	PSF
b.	INSULATION 4"	6	PSF
c.	FIBERBOARD 3/8"	2	PSF
d.	METAL DECK	3	PSF
e.	STEEL	2	PSF
f.	COLLATERAL LOAD	4	PSF
	TOTAL DEAD LOAD	20	PSF

STRUCTURAL STEEL CONSTRUCTION

1. STRUCTURAL STEEL SHALL CONFORM TO THE AISC "SPECIFICATIONS FOR DESIGN, FABRICATION AND ERECTION OF STRUCTURAL STEEL FOR BUILDINGS – LATEST EDITION.
2. WELDED CONNECTIONS SHALL CONFORM TO THE LATEST REVISED CODE OF THE AMERICAN WELDING SOCIETY, AWS D1.1-88.
3. STRUCTURAL STEEL:
   A. ROLLED STEEL SHAPES: ASTM A992 GRADE 50.
   B. STEEL PLATES, BARS, AND RODS AND ROLLED STEEL ANGLES AND CHANNELS: ASTM A36.
   C. STEEL TUBING: ASTM A500, GRADE B.
   D. STEEL PIPE: ASTM A53, TYPE E OR S, GRADE B.
   E. ANCHOR BOLTS: ASTM A307.
4. BOLTS AND BOLTED CONNECTIONS SHALL CONFORM TO THE REQUIREMENTS OF THE "SPECIFICATIONS FOR STRUCTURAL JOINTS USING ASTM A-325 OR A-490 BOLTS – ALLOWABLE STRESS DESIGN" AS APPROVED BY THE COUNCIL ON RIVETED AND BOLTED JOINTS. USE BEARING-TYPE BOLTS WITH THREADS ALLOWED ACROSS THE SHEAR PLANE.
5. WELDING ELECTRODES SHALL BE E-70 OR BETTER. FOR WELDING SYMBOLS WITH NO LENGTH DIMENSION GIVEN, THE WELDING SHALL BE CONTINUOUS BETWEEN ABRUPT CHANGES IN DIRECTION. WELDS NOT OTHERWISE NOTED SHALL BE 1/4" IN SIZE.
6. IN GENERAL, IT IS THE INTENT OF THESE PLANS AND SPECIFICATIONS THAT ALL SHOP CONNECTIONS BE WELDED AND ALL FIELD CONNECTIONS BE BOLTED EXCEPT WHERE NOTED OTHERWISE.
   A. NON-COMPOSITE BEAM CONNECTIONS SHALL BE DESIGNED TO DEVELOP 55% OF THE TOTAL LOAD CAPACITY DERIVED FROM THE ALLOWABLE UNIFORM LOAD TABLES FOR Fy=50 KSI. IN PART 2 OF THE NINTH EDITION OF THE AISC "MANUAL OF STEEL CONSTRUCTION", UNLESS THE REACTION 'R' IS SHOWN ON THE DRAWINGS.
   B. MOMENT CONNECTIONS INDICATED ON THE DRAWINGS SHALL BE DESIGNED FOR THE MOMENTS NOTED. IF NO DESIGN MOMENT IS INDICATED, THEN THE FULL CAPACITY OF THE SECTION MUST BE DEVELOPED.
7. VERIFY THE EXACT SIZE AND LOCATION OF ALL OPENINGS PRIOR TO FABRICATION OF STEEL FRAMING MEMBERS.
8. PROVIDE BEARING PLATES UNDER STEEL BEAMS OF ADEQUATE SIZE TO KEEP MASONRY BEARING PRESSURE UNDER 250 PSI. STEEL BEAMS AND GIRDERS SHALL BEAR A MINIMUM OF 8" ON MASONRY, UNLESS OTHERWISE NOTED.
9. PROVIDE A NON-METALLIC, NON-SHRINK GROUT UNDER ALL COLUMN BASE PLATES AND BEAM BEARINGS.
10. EMBEDMENT LENGTH OF HILTI EXPANSION BOLTS, OR APPROVED SUBSTITUTION, INTO SOLID MASONRY OR CONCRETE SHALL BE AS FOLLOWS, UNLESS NOTED OTHERWISE:
    1/2" DIAMETER BOLTS – 3-1/2" EMBEDMENT
    3/4" DIAMETER BOLTS – 5" EMBEDMENT
11. TYPICAL BEAM SHEAR CONNECTIONS NOT DETAILED ON THE DRAWINGS SHALL BE DETAILED WITH STANDARD DOUBLE ANGLE TYPE CONNECTIONS, USING A325 BOLTS.

REVISIONS

REV#	DATE	REMARKS

STATE OF OHIO
ALI ALGHOTHANI
E-57345
REGISTERED PROFESSIONAL ENGINEER

STAR CONSULTANTS, INC
ARCHITECTS & ENGINEERS
design | strategy | vision
1910 Crown Park Ct. Columbus, OH 43235
Tel: 614.538.8445 Fax: 614.538.8446
www.starconsultants.org

DRC-19L002
BELMONT CORRECTIONAL INSTITUTION
RECOVERY SERVICES MOVEABLE PARTITION, BLDG 5B
68518 BANNOCK ROAD, S.R. 331
ST. CLAIRSVILLE, BELMONT COUNTY

STRUCTURAL SECTIONS

PJT #:	
DATE:	
DRN. BY:	INITIAL
DGN. BY:	INITIAL
REV. BY:	INITIAL

SHEET
S-300